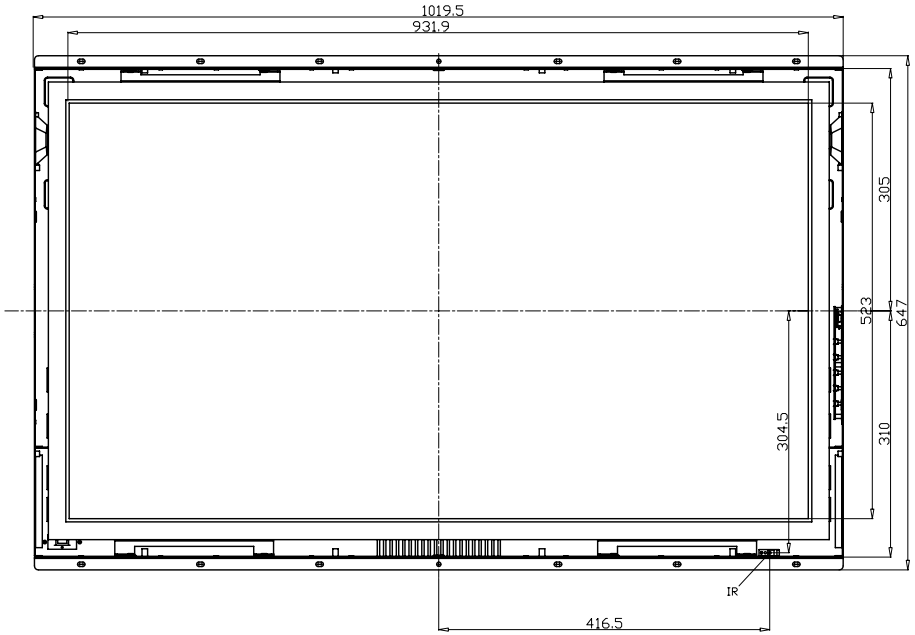

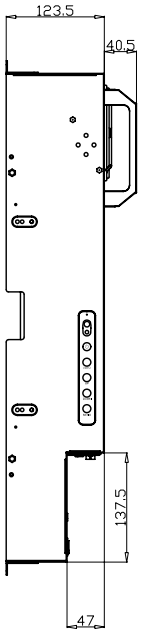

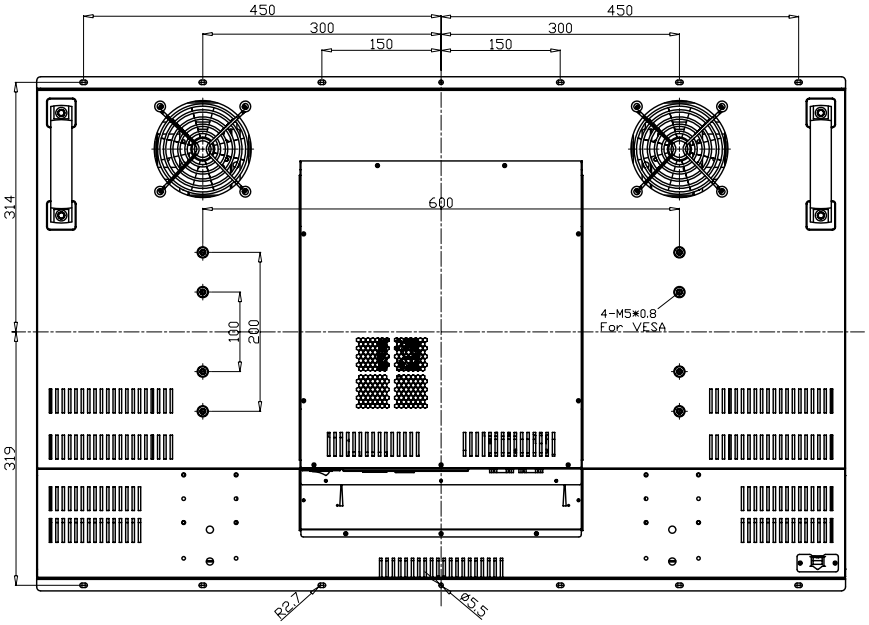

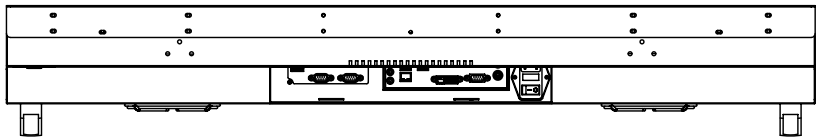

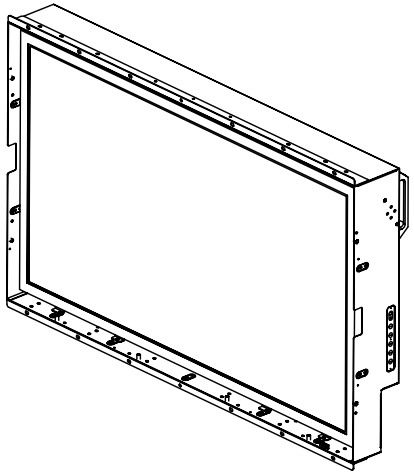

AD/BOARD		MODEL	POF42041/OF4204	泓瑜科技有限公司 WINSONIC TECH. CO., LTD.	
INVERTER					
KEY PAD	PCBKEY019A0/YNL-KEY	PART NO.		PART NAME	Assembly
PANEL: AU-T420HW01		MATERIAL	DATE 06/18/2009	APRROVED	DRAWN JACK
				REV.	
				DWG SIZE	