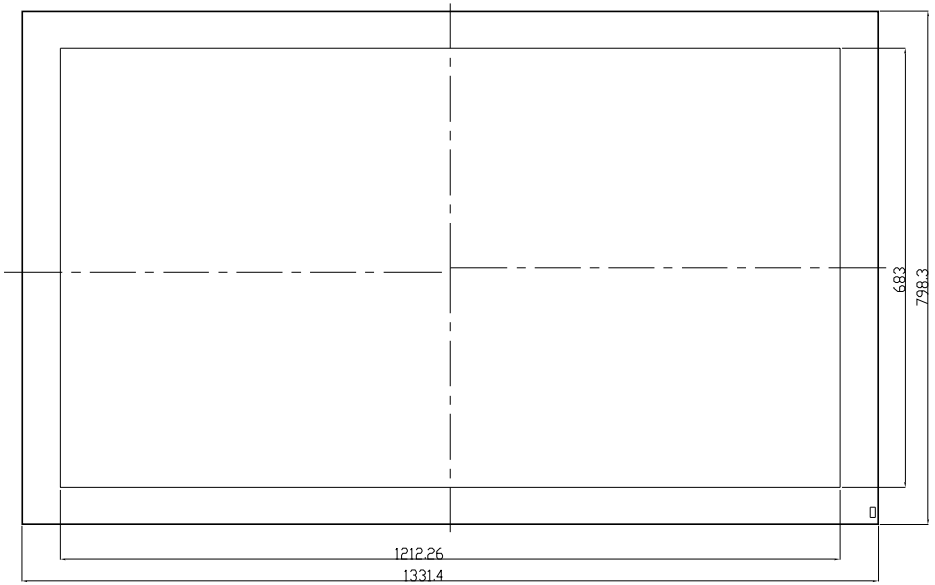

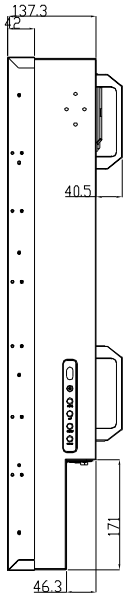

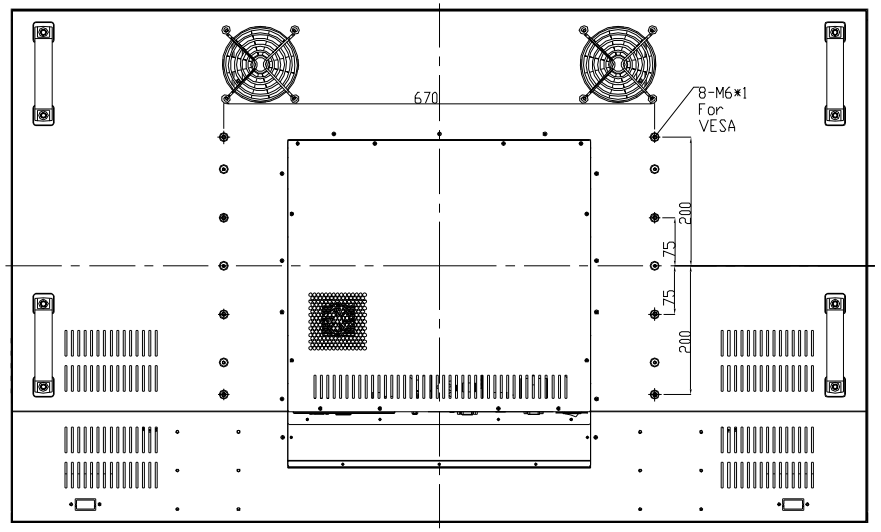

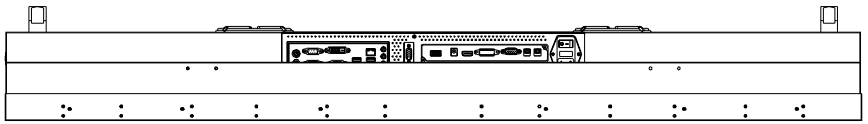

AD/BOARD		MODEL	CH5504 / SCH5504 / PCH55041 / SPCH55041			Winsonic Electronics. Co., Ltd.			
INVERTER									
KEY PAD						PART NAME	ASSEMBLY		SCALE 1.000
PANEL:	VERSION								
	V1	MATERIAL	METAL	DATE	2014-May-09	APPROVED		DRAWN Chris	UNIT MM