W24L100-MRL1FP

23.8” 4K UHD Marine Display

KEY FEATURES

- 23.8” 4K UHD with projective capacitive multi-touch screen
- Multi Video Output ,VGA+DVI+HDMI+DP
- 24V DC power input
- fanless cooling system

SPECIFICATIONS

Display			
Touch / Glass	Projected Capacitive Multi Touch Screen AR Glass (Optional)	**Resolution**	3840x2160
Size	23.8 inches	**Contrast Ratio**	1200:1
Panel Brightness	540.0 nits	**Display Color**	1.07B Colors
View Angles	89,89,89,89	**Active Area**	525.65x295.70 mm
Environment			
Operating Humidity	5% to 95%	**Operating Temperature**	-15~55°C
Shock	15G,11ms duration	**Vibration**	0.7g@DNVGL CG-0339 (Class A)
IP rating	IP66 (Front Side)		
Certification			
Certification	CE, FCC		
IO Ports			
USB Port	1 x USB Type A	**Serial Port**	1 x RS232 for remote control
Video	1 x VGA 1 x DVI-D 1 x HDMI 1.4 1 x HDMI 2.0 1 x DP		
Mechanical			
Dimension	601 x 415 x 73.8 mm	**Weight**	10.5 kg
Mounting	VESA Mount/ Panel Mount	**Enclosure**	Anodized Aluminum Bezel
Cooling System	Fanless Design	**Cut out**	570 x 360 mm
Power			
Power Rating	9~36V DC Input Acceptable	**Consumption**	70W (Typical)
Accessory			
Accessory	User Manual Mounting clips x 12 AC to 12V DC Adapter Power Cord 3 Pin Terminal Block Open Wire Cable 1 x VGA cable		

1 x DVI cable
1 x HDMI cable
1 x RS232 cable
1 x USB cable

DIMENSIONS UNIT:MM

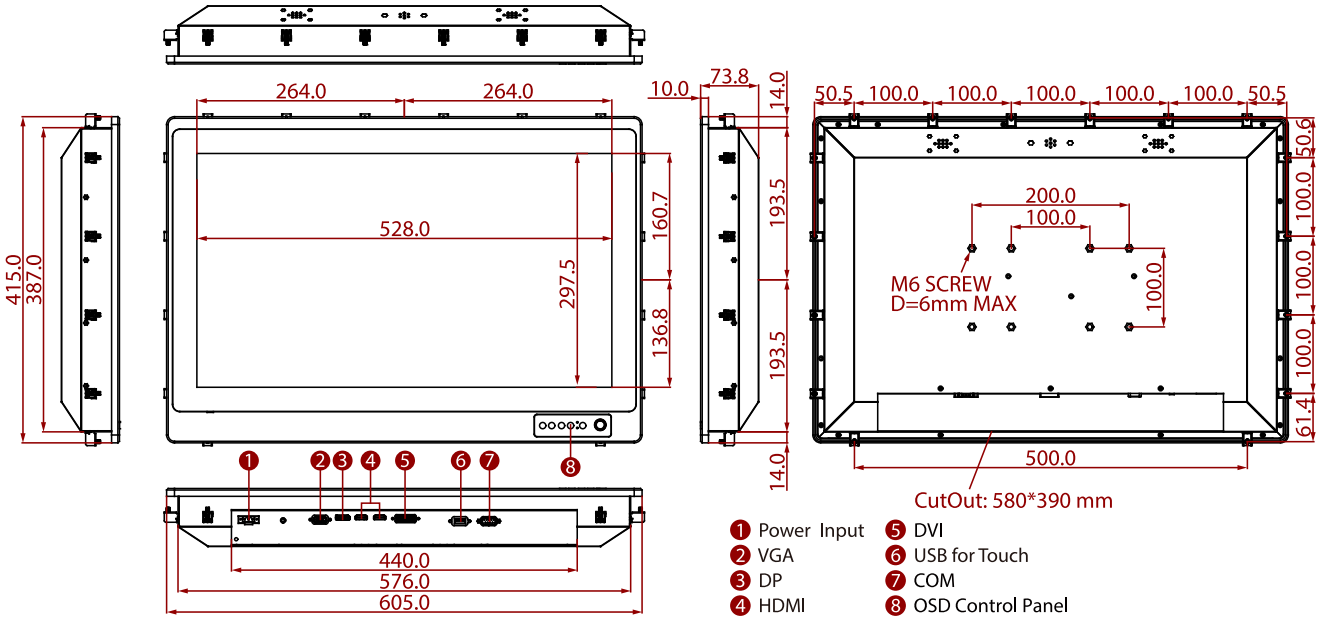

NOTE

1. This is a simplified drawing and some components are not marked in detail.
2. Please contact our sales representative if you need further product information.
3. All specifications are subject to change without prior notice.
4. The product shown in this datasheet is a standard model. For diagrams that contain customized or optional I/O, please contact the Winmate Sales Team for more information.