SB331-D

Specifications

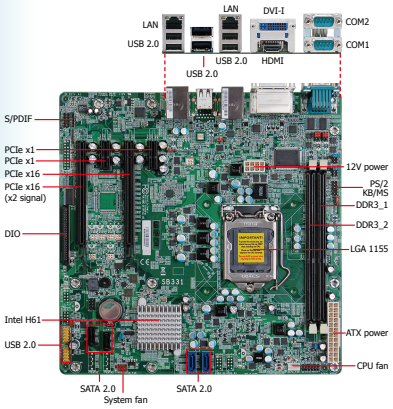

Features

CHIPSET	**Intel® H61 PCH**
CPU	**Intel® Core™ i7/i5/i3** **Intel® Pentium®**
MEMORY	**2 DDR3 DIMM up to 16GB**
EXPANSION	**2 PCIe x16 (1 x16 and 1 x2 signal),** **2 PCIe x1**
DISPLAY OUTPUTS	**1 HDMI, 1 DVI-I**
LAN	**2 Gigabit LAN**
COM	**2 COM**
USB	**10 USB 2.0**
SATA	**4 SATA 2.0**
DIO	**36-bit DIO**

Mechanical Drawing

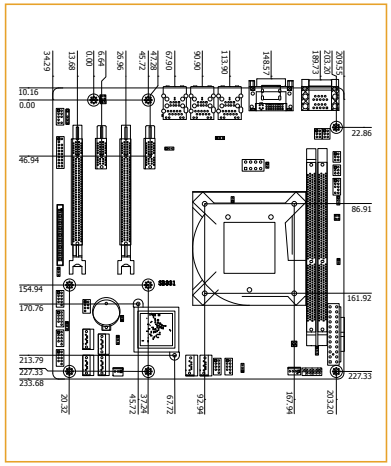

Block Diagram

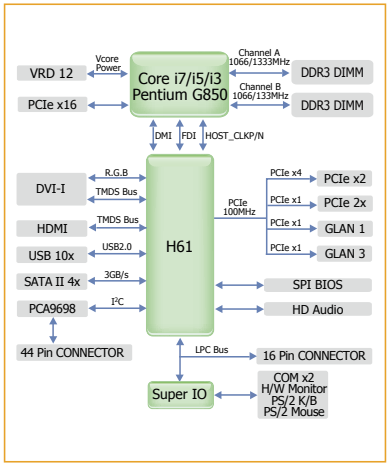

SB331-D

DFI

Industrial Motherboards

microATX

Specifications

PROCESSOR
- LGA 1155 socket for:
  - Intel® Core™ i7-2600 (3.4GHz, 95W)
  - Intel® Core™ i5-2400 (3.1GHz, 95W)
  - Intel® Core™ i3-2120 (3.3GHz, 65W)
  - Intel® Pentium® G850
- New microarchitecture on 32nm process technology
- Intel® Advanced Vector Extensions (Intel® AVX) Instructions
- Intel® Turbo Boost Technology

CHIPSET
- Intel® H61 Express Chipset

SYSTEM MEMORY
- Two 240-pin DDR3 DIMM sockets
- Supports DDR3 1066/1333MHz
- Supports dual channel memory interface
- Supports up to 16GB system memory
- DRAM device technologies: 1Gb, 2Gb and 4Gb DDR3 DRAM technologies are supported for x8 and x16 devices, unbuffered, non-ECC

EXPANSION SLOTS
- 2 PCIe x16 Gen 2 slots (PCIe 2.0)
  - 1 x16 signal and 1 x2 signal
- 2 PCIe x1 slots (PCIe 2.0)

ONBOARD GRAPHICS FEATURES
- Intel® HD Graphics
- Display ports: HDMI and DVI-I
- HDMI and DVI-I display resolution up to 1920x1200
- Supports 6 Graphics Execution Units (EUs)
- Intel® Clear Video Technology
- DirectX Video Acceleration (DXVA) support for accelerating video processing

ONBOARD AUDIO FEATURES
- Realtek ALC262 2-channel High Definition Audio
- DACs with 100dB SNR; two stereo DACs support 24-bit PCM format for stereo audio playback
- ADCs with 90dB SNR; three stereo ADCs support 20-bit PCM format for multiple input streaming
- S/PDIF audio interface

ONBOARD LAN FEATURES
- 1 Intel® W82579LM Gigabit Ethernet Phy
- 1 Intel® W82574 PCI Express Gigabit Ethernet controller
- Integrated 10/100/1000 transceiver
- Fully compliant with IEEE 802.3, IEEE 802.3u, IEEE 802.3ab
- Supports wire management

SERIAL ATA (SATA) INTERFACE
- 4 SATA 2.0 ports with data transfer rate up to 3Gb/s

TRUSTED PLATFORM MODULE (TPM) - optional
- Infineon SLB9635
- Provides a Trusted PC for secure transactions
- Provides software license protection, enforcement and password protection

REAR PANEL I/O PORTS
- 2 DB-9 serial ports
  - Supports RS232/422/485 (RS232 and/or Power)
- 1 DVI-I port
- 1 HDMI port
- 2 RJ45 LAN ports
- 6 USB 2.0/1.1 ports

I/O CONNECTORS
- 2 connectors for 4 external USB 2.0/1.1 ports
- 1 PS/2 KB/Mouse connector
- 1 36-bit Digital I/O connector
- 1 front audio connector for line-out and mic-in jacks
- 1 S/PDIF connector
- 4 Serial ATA ports
- 1 24-pin ATX power connector
- 1 8-pin 12V power connector
- 1 chassis intrusion connector
- 1 front panel connector
- 2 fan connectors

BIOS
- AMI BIOS
- 64Mbit SPI BIOS

ENERGY EFFICIENT DESIGN
- Supports ErP Lot6 power saving (optional)
- Supports ACPI
- System Power Management
- Wake-On-Events include:
  - Wake-On-PS/2 KB/Mouse
  - Wake-On-USB KB/Mouse
  - Wake-On-LAN
  - RTC timer to power-on the system
- CPU stopped clock control
- AC power failure recovery

DAMAGE FREE INTELLIGENCE
- Monitors CPU/system temperature and overheat alarm
- Monitors VCORE/5V/3.3V/V_DIMM/12V/5VSB voltages and failure alarm
- Monitors CPU/system fan speed and failure alarm
- Read back capability that displays temperature, voltage and fan speed
- Watchdog timer function

TEMPERATURE
- Operating: 0°C to 60°C
- Storage: -20°C to 85°C

HUMIDITY
- 10% to 90%

DIMENSIONS
- microATX form factor
- 244mm (9.6") x 244mm (9.6")

Packing List

- 1 SB331-D motherboard
- 2 Serial ATA data cables
- 2 USB port cables (with bracket)
- 1 COM port cable (with bracket)
- 1 I/O shield
- 1 DVD
- 1 QR (Quick Reference)

Optional Items

- USB port cable
- COM port cable
- Serial ATA data cable
- Serial ATA power cable
- PS/2 Keyboard/Mouse cable

www.dfi.com

DFI reserves the right to change the specifications at any time prior to the product's release. Changes thereafter will be based on the product's revision. Please contact your sales representative for the exact revision offered in your area. All product names mentioned are trademarks of their respective companies. © November 9, 2011 DFI Inc.

Assured Systems

Assured Systems is a leading technology company with over 1,500 regular clients in 80 countries, deploying over 85,000 systems to a diverse customer base in 12 years of business. We offer high-quality and innovative rugged computing, display, networking and data collection solutions to the embedded, industrial, and digital-out-of-home market sectors.

US

sales@assured-systems.com

Sales: +1 347 719 4508
Support: +1 347 719 4508

1309 Coffeen Ave
Ste 1200
Sheridan
WY 82801
USA

EMEA

sales@assured-systems.com

Sales: +44 (0)1785 879 050
Support: +44 (0)1785 879 050

Unit A5 Douglas Park
Stone Business Park
Stone
ST15 0YJ
United Kingdom

VAT Number: 120 9546 28
Business Registration Number: 07699660