2024-03-22T01:17:48.417Z

C&T SOLUTION INC.

INDUSTRIAL TOUCH SCREEN MONITOR

VIO-219-MX200

19" SXGA 4:3 Resistive / Capacitive Touch Monitor with 2x 10W Speaker

Features

- 19" TFT SXGA 4:3 LCD with resistive 5-wire / projected capacitive touch
- 1x VGA, 1x HDMI, 1x DisplayPort, 1x USB 2.0, 1x COM, 1x Audio
- 9 to 48VDC wide range power input
- -10°C to 50°C extended operating temperature
- Designed with aluminum die-casting front frame
- IP65 compliant front panel
- Two 10W internal speakers built-in
- Multi-language OSD built-in

Specifications

Display	
IP Rating	IP65
LCD Size	19" (4:3)
Max. Resolution	1280 x 1024 (SXGA)
Brightness (cd/m^2)	350 / 1000 (optional)
Contrast Ratio	1000:1
LCD Color	16.7M
Pixel Pitch (mm)	0.294(H) x 0.294(V)
Viewing Angle	170/160
Backlight MTBF	50000 hrs (LED Backlight)
Touch	
Projected Capacitive	VIO-219C-MX200
Resistive 5-Wire	VIO-219R-MX200
I/O	
Audio	1x Audio Input
COM	1x COM Port Input (Resistive Touch Only)
USB	1x USB 2.0 (For Resistive Touch or P-CAP Touch)
DP	1x DisplayPort
HDMI	1x HDMI
VGA	1x VGA
Others Features	
Speaker	AMP 10W + 10W
OSD	LCD On/Off, Auto, Menu, Up and Down Multi-language
Power	
Power Adapter	Optional AC/DC 12V/5A, 60W
Power Management	Power Ignition Management
Power Mode	AT, ATX
Power Supply Voltage	9~48 VDC
Power Connector	3-Pin Terminal Blcok
Power Protection	OVP (Over Voltage Protection) OCP (Over Current Protection) Reverse Protection
Operating Temperature	-10 °C ~ 50 °C
Storage Temperature	-20 °C to 60 °C
Relative Humidity	10% ~ 80% (non-condensing)
IP Level	IP 65 Compliant Front Panel
Certification	CE, FCC Class A
Vibration	1.5 Grms, 5 - 500 Hz, 0.5 hr/axis
Shock	20G, half sine, 11ms
Physical	
Dimensions	450 (W) x 375 (D) x 71 (H) mm
Weights	7.38 kg ~ 7.51 kg
Mounting Options	VESA Mounting Holes 75 x 75mm, 100 x 100mm

Available Models

- VIO-219R-MX200
19" 4:3 SXGA Resistive Touch Thin Frame Monitor with 2x 10W Speaker
- VIO-219C-MX200
19" 4:3 SXGA Capacitive Touch Thin Frame Monitor with 2x 10W Speaker

Optional Accessories

- 1-E09A06008
Adapter AC/DC 12V 5A 60W with 3pin Terminal Block Plug 5.0mm Pitch
- SFICBL022
Power Cord, 3-pin US Type, 180cm
- 1-TPCD00002
Power Cord, European Type
- 1-TPCD00001
Power Cord, 3-pin UK Type, 180cm

Packing List

- 1x VIO-219-MX200 Touch Monitor
- 14x Panel Mount Kit
- 1x USB Cable
- 1x VGA Cable
- 1x Screw Pack

* All specifications and photos are subject to change without notice.

C&T Solution Inc. 18F, No.176, Jianyi Road, Zhonghe Dist., New Taipei City 235603, Taiwan (R.O.C.) Toll Free: +886-2-7731-7888 Fax: +886-2-7731-7855 Email: info@candtsolution.com https://www.candtsolution.com

VIO-219-MX200

External I/O Mechanical Layout

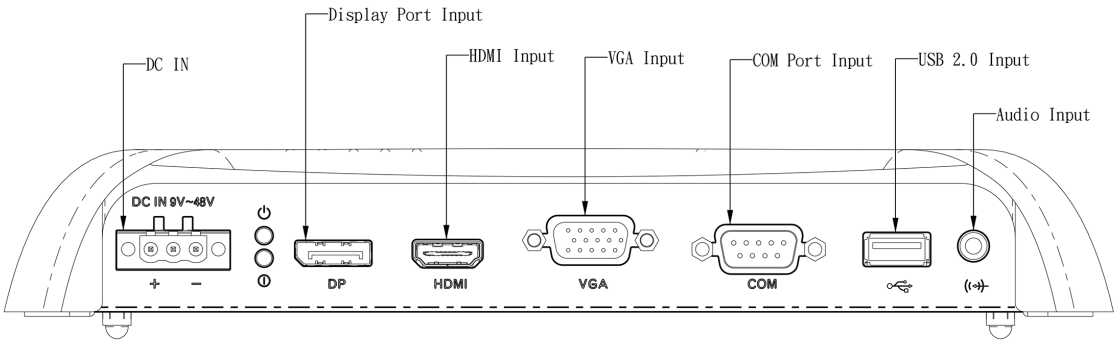

Dimension

Unit: mm

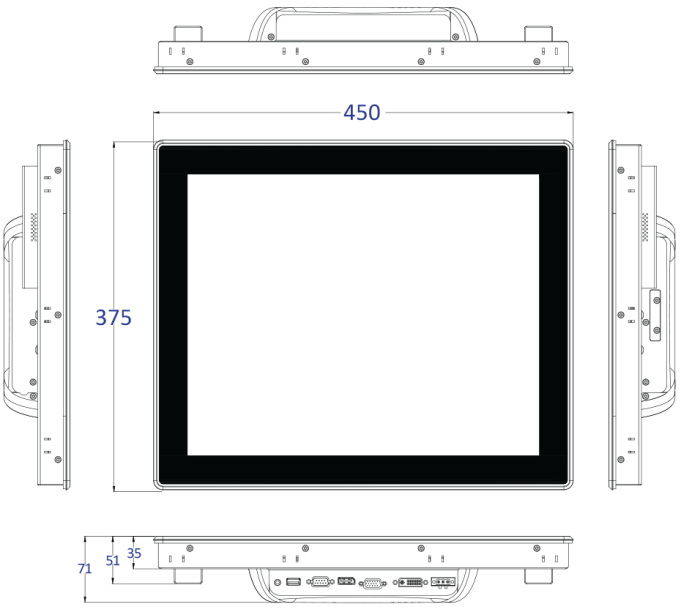

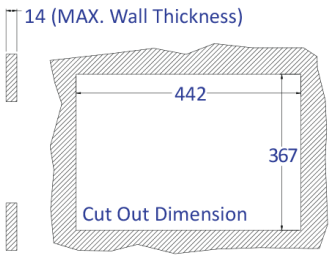

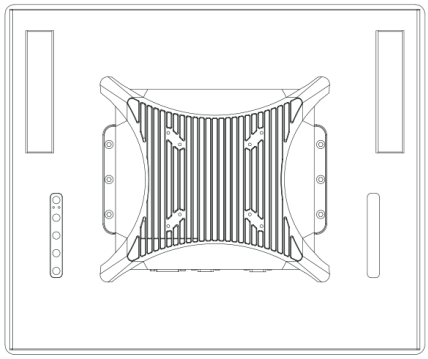

Assured Systems

Assured Systems is a leading technology company with over 1,500 regular clients in 80 countries, deploying over 85,000 systems to a diverse customer base in 12 years of business. We offer high-quality and innovative rugged computing, display, networking and data collection solutions to the embedded, industrial, and digital-out-of-home market sectors.

US

sales@assured-systems.com

Sales: +1 347 719 4508
Support: +1 347 719 4508

1309 Coffeen Ave
Ste 1200
Sheridan
WY 82801
USA

EMEA

sales@assured-systems.com

Sales: +44 (0)1785 879 050
Support: +44 (0)1785 879 050

Unit A5 Douglas Park
Stone Business Park
Stone
ST15 0YJ
United Kingdom

VAT Number: 120 9546 28
Business Registration Number: 07699660